M100
RECLINING SECTIONAL WITH HEADREST

S|B MOTION

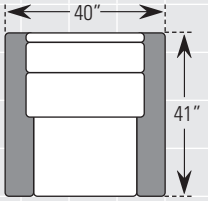

ITEM **#83**
MOTORIZED RECLINING CHAIR WITH HEADREST
INSIDE WIDTH: 24″

ITEM **#90**
MOTORIZED GLIDER RECLINING CHAIR WITH HEADREST
INSIDE WIDTH: 24″

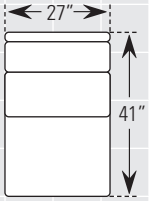

ITEM **#36**
STATIONARY ARMLESS CHAIR

ITEM **#86**
MOTORIZED ARMLESS RECLINING CHAIR WITH HEADREST

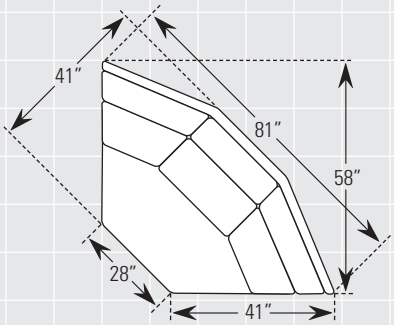

ITEM **#53**
WEDGE

Web Version:
Diagrams not to scale

LAF = Left Arm Facing
RAF = Right Arm Facing

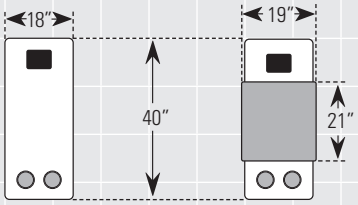

ITEM **#71**
CONSOLE
HEIGHT: 24″

OPTION **#WC-101**
WOOD CONSOLE TRAY
SHOWN WITH CONSOLE (-71)
HEIGHT WITH TRAY: 25″

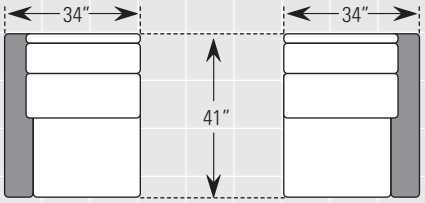

ITEM **#84**
LAF MOTORIZED RECLINING CHAIR WITH HEADREST
INSIDE WIDTH: 26″

ITEM **#85**
RAF MOTORIZED RECLINING CHAIR WITH HEADREST
INSIDE WIDTH: 26″

MADE IN THE USA

EXAMPLE COMBINATIONS Example diagrams are not to scale.

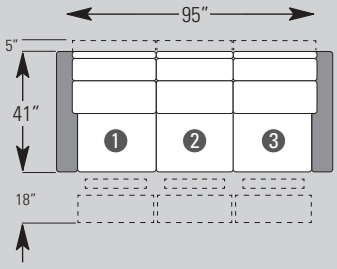

3-CUSHION RECLINING SOFA:
1) M100-84 LAF MOTORIZED RECLINING CHAIR WITH HEADREST
2) M100-86 MOTORIZED ARMLESS RECLINING CHAIR WITH HEADREST
3) M100-85 RAF MOTORIZED RECLINING CHAIR WITH HEADREST

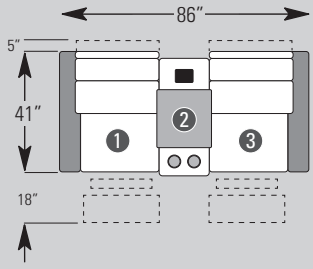

RECLINING LOVESEAT WITH CONSOLE:
1) M100-84 LAF MOTORIZED RECLINING CHAIR WITH HEADREST
2) M100-71 CONSOLE WITH OPTIONAL **WC-101** WOOD CONSOLE TRAY
3) M100-85 RAF MOTORIZED RECLINING CHAIR WITH HEADREST

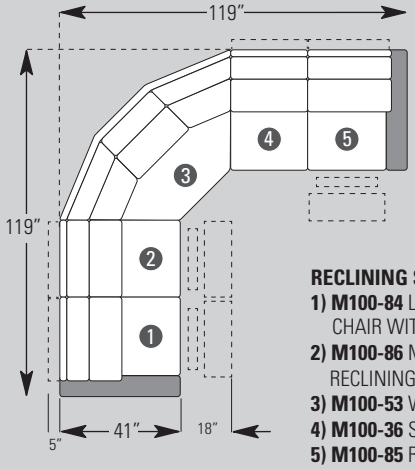

*The Wedge must be attached to a stationary chair on at least one end so that recliner footrests can all open at the same time without interference.

RECLINING SECTIONAL WITH WEDGE:
1) M100-84 LAF MOTORIZED RECLINING CHAIR WITH HEADREST
2) M100-86 MOTORIZED ARMLESS RECLINING CHAIR WITH HEADREST
3) M100-53 WEDGE*
4) M100-36 STATIONARY ARMLESS CHAIR
5) M100-85 RAF MOTORIZED RECLINING CHAIR WITH HEADREST

M100 RECLINING SECTIONAL WITH HEADREST

Choose from a variety of different pieces to create an infinite number of combinations. Each piece is a single seat, and our innovative bracket system allows you to position them in any configuration; from a simple reclining sofa to a custom-sized sectional. This bracket system keeps the units together and prevents shifting or separating. Note that armless sides have exposed connector brackets, so all configurations must have an arm at both the left and right ends.

All dimensions are approximate and subject to change without notice.
See www.smithbrothersfurniture.com for more information.

S|B SMITH BROTHERS

COMMON DIMENSIONS

These dimensions are the same for all pieces in this group unless otherwise noted.

OVERALL HEIGHT	44″
SEAT HEIGHT	20″
SEAT DEPTH	21″
ARM HEIGHT	25″
RECLINER FOOTREST EXTENSION	18″
MOTORIZED GLIDING RECLINER WITH HEADREST (-90)	17″
WALL CLEARANCE NEEDED	5″
MOTORIZED GLIDING RECLINER WITH HEADREST (-90)	12″
OVERALL LENGTH FULLY RECLINED	70″
MOTORIZED GLIDING RECLINER WITH HEADREST (-90)	66″

M101
RECLINING SECTIONAL WITH HEADREST

S|B MOTION

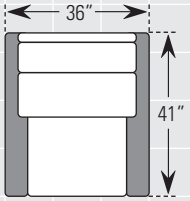

ITEM **#83**
MOTORIZED RECLINING
CHAIR WITH HEADREST
INSIDE WIDTH: 24″

ITEM **#90**
MOTORIZED GLIDER RECLINING
CHAIR WITH HEADREST
INSIDE WIDTH: 24″

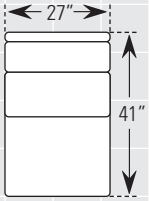

ITEM **#36**
STATIONARY
ARMLESS CHAIR

ITEM **#86**
MOTORIZED
ARMLESS RECLINING CHAIR
WITH HEADREST

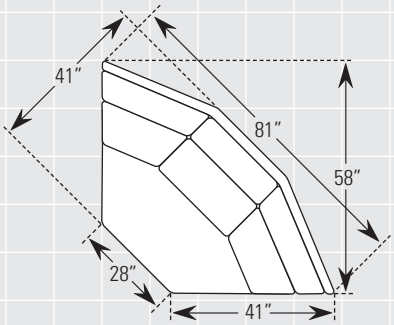

ITEM **#53**
WEDGE

Web Version:
Diagrams not to scale

LAF = Left Arm Facing
RAF = Right Arm Facing

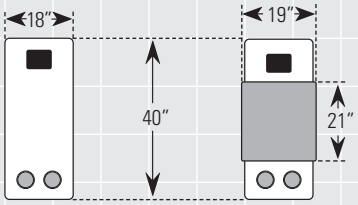

ITEM **#71**
CONSOLE
HEIGHT: 24″

OPTION **#WC-101**
WOOD CONSOLE TRAY
SHOWN WITH CONSOLE (-71)
HEIGHT WITH TRAY: 25″

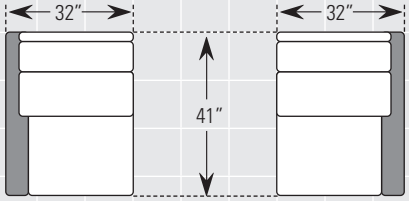

ITEM **#84**
LAF MOTORIZED RECLINING
CHAIR WITH HEADREST
INSIDE WIDTH: 26″

ITEM **#85**
RAF MOTORIZED RECLINING
CHAIR WITH HEADREST
INSIDE WIDTH: 26″

MADE IN THE USA

EXAMPLE COMBINATIONS Example diagrams are not to scale.

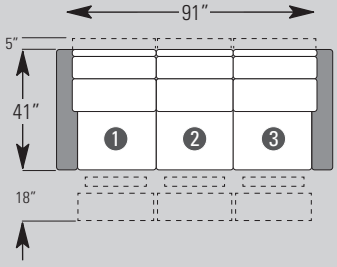

3-CUSHION RECLINING SOFA:
1) M101-84 LAF MOTORIZED RECLINING CHAIR WITH HEADREST
2) M101-86 MOTORIZED ARMLESS RECLINING CHAIR WITH HEADREST
3) M101-85 RAF MOTORIZED RECLINING CHAIR WITH HEADREST

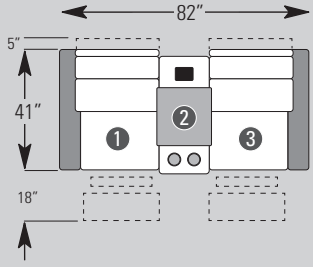

RECLINING LOVESEAT WITH CONSOLE:
1) M101-84 LAF MOTORIZED RECLINING CHAIR WITH HEADREST
2) M101-71 CONSOLE WITH OPTIONAL **WC-101** WOOD CONSOLE TRAY
3) M101-85 RAF MOTORIZED RECLINING CHAIR WITH HEADREST

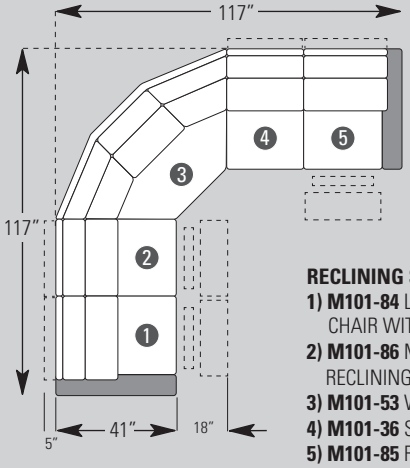

*The Wedge must be attached to a stationary chair on at least one end so that recliner footrests can all open at the same time without interference.

RECLINING SECTIONAL WITH WEDGE:
1) M101-84 LAF MOTORIZED RECLINING CHAIR WITH HEADREST
2) M101-86 MOTORIZED ARMLESS RECLINING CHAIR WITH HEADREST
3) M101-53 WEDGE*
4) M101-36 STATIONARY ARMLESS CHAIR
5) M101-85 RAF MOTORIZED RECLINING CHAIR WITH HEADREST

M101 RECLINING SECTIONAL WITH HEADREST

Choose from a variety of different pieces to create an infinite number of combinations. Each piece is a single seat, and our innovative bracket system allows you to position them in any configuration; from a simple reclining sofa to a custom-sized sectional. This bracket system keeps the units together and prevents shifting or separating. Note that armless sides have exposed connector brackets, so all configurations must have an arm at both the left and right ends.

All dimensions are approximate and subject to change without notice.
See www.smithbrothersfurniture.com for more information.

S|B SMITH BROTHERS

COMMON DIMENSIONS

These dimensions are the same for all pieces in this group unless otherwise noted.

OVERALL HEIGHT	44″
SEAT HEIGHT	20″
SEAT DEPTH	21″
ARM HEIGHT	25″
RECLINER FOOTREST EXTENSION	18″
MOTORIZED GLIDING RECLINER WITH HEADREST (-90)	17″
WALL CLEARANCE NEEDED	5″
MOTORIZED GLIDING RECLINER WITH HEADREST (-90)	12″
OVERALL LENGTH FULLY RECLINED	70″
MOTORIZED GLIDING RECLINER WITH HEADREST (-90)	66″

M102
RECLINING SECTIONAL WITH HEADREST

S|B MOTION

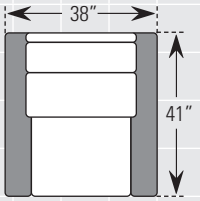

ITEM **#83**
MOTORIZED RECLINING
CHAIR WITH HEADREST
INSIDE WIDTH: 24″

ITEM **#90**
MOTORIZED GLIDER RECLINING
CHAIR WITH HEADREST
INSIDE WIDTH: 24″

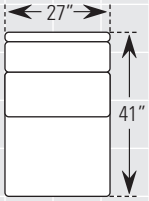

ITEM **#36**
STATIONARY
ARMLESS CHAIR

ITEM **#86**
MOTORIZED
ARMLESS RECLINING CHAIR
WITH HEADREST

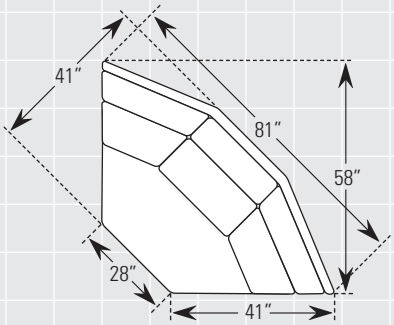

ITEM **#53**
WEDGE

Web Version:
Diagrams not to scale

LAF = Left Arm Facing
RAF = Right Arm Facing

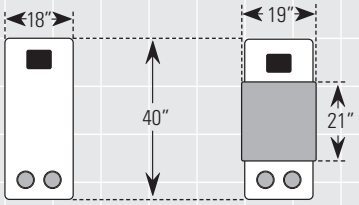

ITEM **#71**
CONSOLE
HEIGHT: 24″

OPTION **#WC-101**
WOOD CONSOLE TRAY
SHOWN WITH CONSOLE (-71)
HEIGHT WITH TRAY: 25″

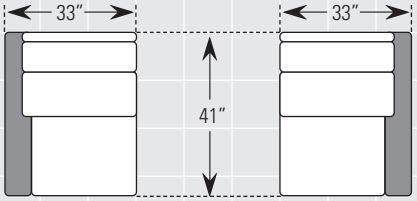

ITEM **#84**
LAF MOTORIZED RECLINING
CHAIR WITH HEADREST
INSIDE WIDTH: 26″

ITEM **#85**
RAF MOTORIZED RECLINING
CHAIR WITH HEADREST
INSIDE WIDTH: 26″

MADE IN
THE USA

EXAMPLE COMBINATIONS Example diagrams are not to scale.

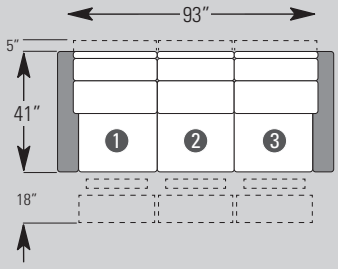

3-CUSHION RECLINING SOFA:
1) M102-84 LAF MOTORIZED RECLINING CHAIR WITH HEADREST
2) M102-86 MOTORIZED ARMLESS RECLINING CHAIR WITH HEADREST
3) M102-85 RAF MOTORIZED RECLINING CHAIR WITH HEADREST

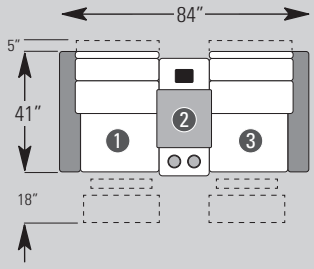

RECLINING LOVESEAT WITH CONSOLE:
1) M102-84 LAF MOTORIZED RECLINING CHAIR WITH HEADREST
2) M102-71 CONSOLE WITH OPTIONAL **WC-101** WOOD CONSOLE TRAY
3) M102-85 RAF MOTORIZED RECLINING CHAIR WITH HEADREST

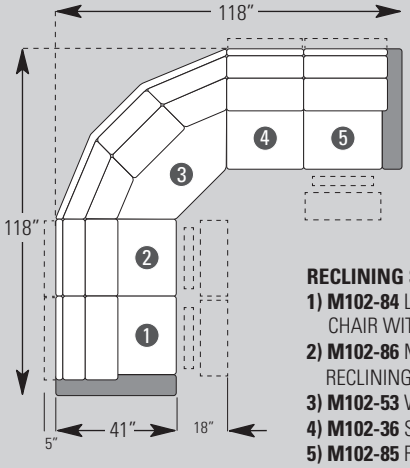

*The Wedge must be attached to a stationary chair on at least one end so that recliner footrests can all open at the same time without interference.

RECLINING SECTIONAL WITH WEDGE:
1) M102-84 LAF MOTORIZED RECLINING CHAIR WITH HEADREST
2) M102-86 MOTORIZED ARMLESS RECLINING CHAIR WITH HEADREST
3) M102-53 WEDGE*
4) M102-36 STATIONARY ARMLESS CHAIR
5) M102-85 RAF MOTORIZED RECLINING CHAIR WITH HEADREST

M102 RECLINING SECTIONAL WITH HEADREST

Choose from a variety of different pieces to create an infinite number of combinations. Each piece is a single seat, and our innovative bracket system allows you to position them in any configuration; from a simple reclining sofa to a custom-sized sectional. This bracket system keeps the units together and prevents shifting or separating. Note that armless sides have exposed connector brackets, so all configurations must have an arm at both the left and right ends.

All dimensions are approximate and subject to change without notice.
See www.smithbrothersfurniture.com for more information.

S|B SMITH BROTHERS

COMMON DIMENSIONS

These dimensions are the same for all pieces in this group unless otherwise noted.

OVERALL HEIGHT	44″
SEAT HEIGHT	20″
SEAT DEPTH	21″
ARM HEIGHT	25″
RECLINER FOOTREST EXTENSION	18″
MOTORIZED GLIDING RECLINER WITH HEADREST (-90)	17″
WALL CLEARANCE NEEDED	5″
MOTORIZED GLIDING RECLINER WITH HEADREST (-90)	12″
OVERALL LENGTH FULLY RECLINED	70″
MOTORIZED GLIDING RECLINER WITH HEADREST (-90)	66″

M103
RECLINING SECTIONAL WITH HEADREST

S|B MOTION

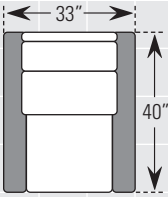

ITEM **#83 MOTORIZED** RECLINING CHAIR WITH HEADREST

ITEM **#87 MOTORIZED** SWIVEL GLIDER RECLINING CHAIR WITH HEADREST

ITEM **#90 MOTORIZED GLIDER** RECLINING CHAIR WITH HEADREST

INSIDE WIDTH: 22″

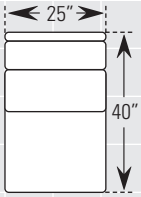

ITEM **#36 STATIONARY** ARMLESS CHAIR

ITEM **#86 MOTORIZED** ARMLESS RECLINING CHAIR WITH HEADREST

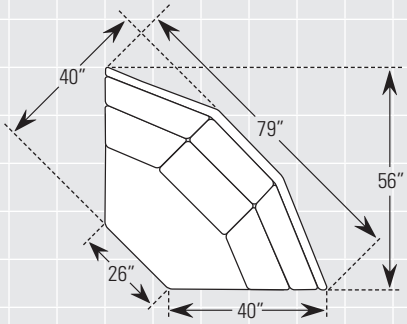

ITEM **#53 WEDGE**

WEB VERSION:
DIAGRAMS NOT TO SCALE

LAF = Left Arm Facing
RAF = Right Arm Facing

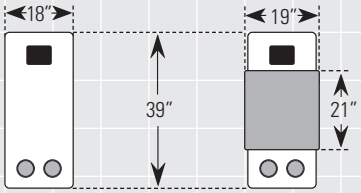

ITEM **#71 CONSOLE**

HEIGHT: 24″

OPTION **#WC-101 WOOD CONSOLE TRAY**
SHOWN WITH CONSOLE (-71)

HEIGHT WITH TRAY: 25″

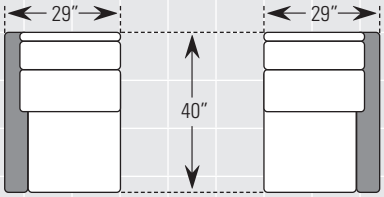

ITEM **#84 LAF MOTORIZED** RECLINING CHAIR WITH HEADREST

INSIDE WIDTH: 24″

ITEM **#85 RAF MOTORIZED** RECLINING CHAIR WITH HEADREST

INSIDE WIDTH: 24″

MADE IN THE USA

EXAMPLE COMBINATIONS Example diagrams are not to scale.

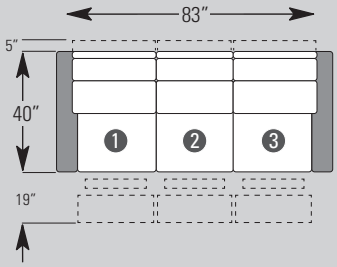

3-CUSHION RECLINING SOFA:
1) M103-84 LAF MOTORIZED RECLINING CHAIR WITH HEADREST
2) M103-86 MOTORIZED ARMLESS RECLINING CHAIR WITH HEADREST
3) M103-85 RAF MOTORIZED RECLINING CHAIR WITH HEADREST

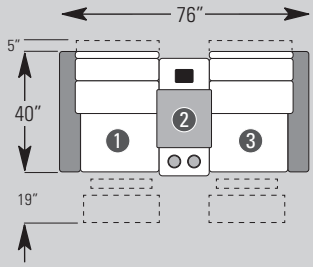

RECLINING LOVESEAT WITH CONSOLE:
1) M103-84 LAF MOTORIZED RECLINING CHAIR WITH HEADREST
2) M103-71 CONSOLE WITH OPTIONAL **WC-101** WOOD CONSOLE TRAY
3) M103-85 RAF MOTORIZED RECLINING CHAIR WITH HEADREST

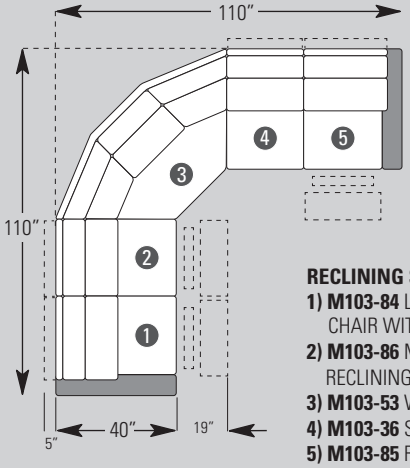

*The Wedge (-53) must be attached to a Stationary Chair (-36) on at least one end so that recliner footrests can all open at the same time without interference.

RECLINING SECTIONAL WITH WEDGE:
1) M103-84 LAF MOTORIZED RECLINING CHAIR WITH HEADREST
2) M103-86 MOTORIZED ARMLESS RECLINING CHAIR WITH HEADREST
3) M103-53 WEDGE*
4) M103-36 STATIONARY ARMLESS CHAIR
5) M103-85 RAF MOTORIZED RECLINING CHAIR WITH HEADREST

M103 RECLINING SECTIONAL WITH HEADREST

Choose from a variety of different pieces to create an infinite number of combinations. Each piece is a single seat, and our innovative bracket system allows you to position them in any configuration; from a simple reclining sofa to a custom-sized sectional. This bracket system keeps the units together and prevents shifting or separating. Note that armless sides have exposed connector brackets, so all configurations must have an arm at both the left and right ends.

All dimensions are approximate and subject to change without notice.
See www.smithbrothersfurniture.com for more information.

S|B SMITH BROTHERS

COMMON DIMENSIONS

These dimensions are the same for all pieces in this group unless otherwise noted.

OVERALL HEIGHT	44″
SEAT HEIGHT	21″
SEAT DEPTH	20″
ARM HEIGHT	25″
RECLINER FOOTREST EXTENSION	19″
MOTORIZED GLIDING RECLINERS WITH HEADREST (-87, 90)	17″
WALL CLEARANCE NEEDED	5″
MOTORIZED GLIDING RECLINERS WITH HEADREST (-87, 90)	12″
OVERALL LENGTH FULLY RECLINED	70″
MOTORIZED GLIDING RECLINERS WITH HEADREST (-87, 90)	65″

M104
RECLINING SECTIONAL

S|B MOTION

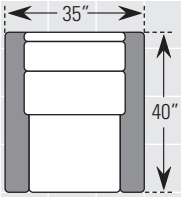

ITEM **#37 MANUAL** RECLINER
ITEM **#38 MOTORIZED** RECLINER
ITEM **#59 SWIVEL GLIDER** RECLINER
ITEM **#78 MOTORIZED SWIVEL GLIDER** RECLINER
ITEM **#91 GLIDER** RECLINER
ITEM **#92 MOTORIZED GLIDER** RECLINER
INSIDE WIDTH: 22″

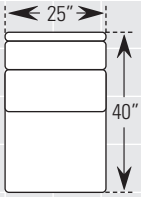

ITEM **#36**
STATIONARY
ARMLESS CHAIR

ITEM **#86**
MOTORIZED
ARMLESS RECLINING CHAIR

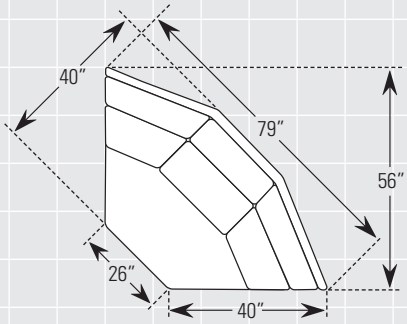

ITEM **#53**
WEDGE

WEB VERSI8ON: NOT TO SCALE

LAF = Left Arm Facing
RAF = Right Arm Facing

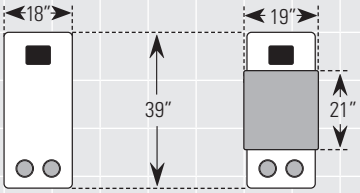

ITEM **#71**
CONSOLE
HEIGHT: 24″

OPTION **#WC-101**
WOOD CONSOLE TRAY
SHOWN WITH CONSOLE (-71)
HEIGHT WITH TRAY: 25″

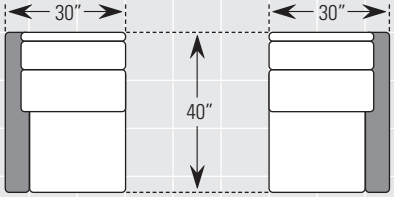

ITEM **#66 LAF MOTORIZED**
RECLINING CHAIR
ITEM **#74 LAF MANUAL**
RECLINING CHAIR
INSIDE WIDTH: 24″

ITEM **#67 RAF MOTORIZED**
RECLINING CHAIR
ITEM **#75 RAF MANUAL**
RECLINING CHAIR
INSIDE WIDTH: 24″

MADE IN THE USA

EXAMPLE COMBINATIONS Example diagrams are not to scale.

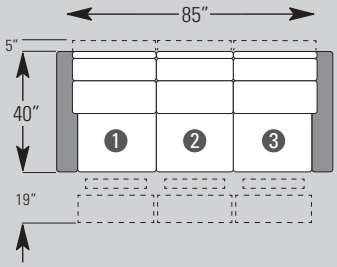

3-CUSHION RECLINING SOFA:
1) M104-66 LAF MOTORIZED RECLINING CHAIR
2) M104-69 MOTORIZED ARMLESS RECLINING CHAIR
3) M104-67 RAF MOTORIZED RECLINING CHAIR

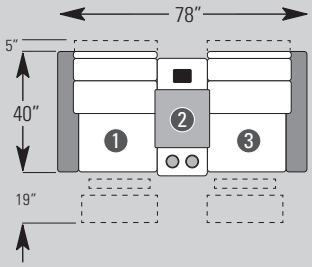

RECLINING LOVESEAT WITH CONSOLE:
1) M104-66 LAF MOTORIZED RECLINING CHAIR
2) M104-71 CONSOLE WITH OPTIONAL
WC-101 WOOD CONSOLE TRAY
3) M104-67 RAF MOTORIZED RECLINING CHAIR

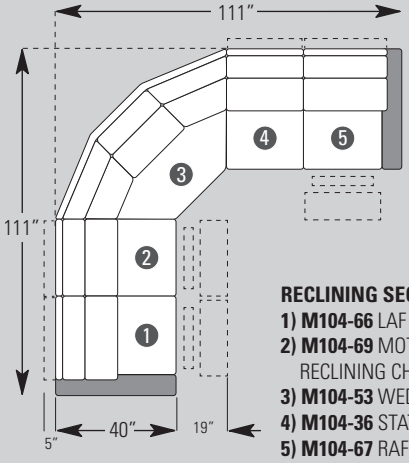

*The Wedge (-53) must be attached to a Stationary Chair (-36) on at least one end so that recliner footrests can all open at the same time without interference.

RECLINING SECTIONAL WITH WEDGE:
1) M104-66 LAF MOTORIZED RECLINING CHAIR
2) M104-69 MOTORIZED ARMLESS RECLINING CHAIR
3) M104-53 WEDGE*
4) M104-36 STATIONARY ARMLESS CHAIR
5) M104-67 RAF MOTORIZED RECLINING CHAIR

032025N

M104 RECLINING SECTIONAL

Choose from a variety of different pieces to create an infinite number of combinations. Each piece is a single seat, and our innovative bracket system allows you to position them in any configuration; from a simple reclining sofa to a custom-sized sectional. This bracket system keeps the units together and prevents shifting or separating. Note that armless sides have exposed connector brackets, so all configurations must have an arm at both the left and right ends.

All dimensions are approximate and subject to change without notice.
See www.smithbrothersfurniture.com for more information.

S|B SMITH BROTHERS

COMMON DIMENSIONS

These dimensions are the same for all pieces in this group unless otherwise noted.

OVERALL HEIGHT	42″
SEAT HEIGHT	21″
SEAT DEPTH	20″
ARM HEIGHT	25″
RECLINER FOOTREST EXTENSION	19″
MOTORIZED SWIVEL GLIDER/GLIDING RECLINER (-78, 92)	17″
WALL CLEARANCE NEEDED	5″
SWIVEL GLIDER/GLIDING RECLINERS (-59, 78, 91, 92)	13″
OVERALL LENGTH FULLY RECLINED	70″
SWIVEL GLIDER/GLIDING RECLINER (-59, 91)	69″
MOTORIZED SWIVEL GLIDER/GLIDING RECLINER (-78, 92)	66″

M105
RECLINING SECTIONAL

S|B MOTION

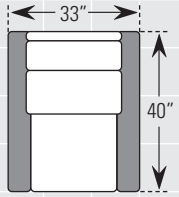

ITEM **#37 MANUAL** RECLINER
ITEM **#38 MOTORIZED** RECLINER
ITEM **#59 MANUAL SWIVEL GLIDER** RECLINER
ITEM **#78 MOTORIZED SWIVEL GLIDER** RECLINER
ITEM **#91 MANUAL GLIDING** RECLINER
ITEM **#92 MOTORIZED GLIDING** RECLINER
INSIDE WIDTH: 24″

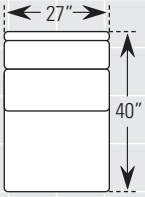

ITEM **#36 STATIONARY** ARMLESS CHAIR

ITEM **#69 MOTORIZED** ARMLESS RECLINING CHAIR

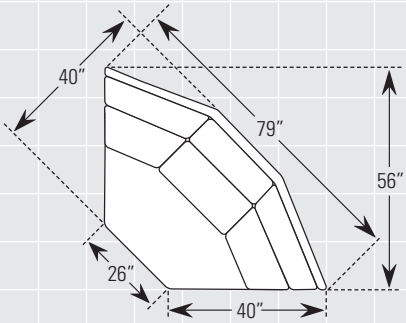

ITEM **#53 WEDGE**

DIAGRAMS 1/4″= 1′

LAF = Left Arm Facing
RAF = Right Arm Facing

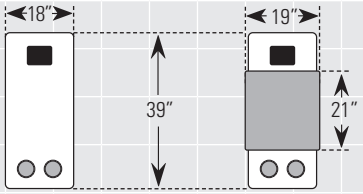

ITEM **#71 CONSOLE**
HEIGHT: 24″

OPTION **#WC-101 WOOD CONSOLE TRAY**
SHOWN WITH CONSOLE (-71)
HEIGHT WITH TRAY: 25″

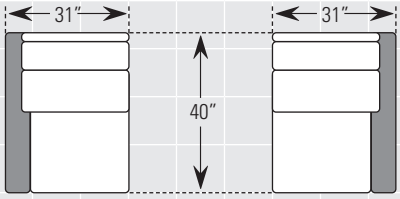

ITEM **#66 LAF MOTORIZED** RECLINING CHAIR
ITEM **#74 LAF MANUAL** RECLINING CHAIR
INSIDE WIDTH: 26″

ITEM **#67 RAF MOTORIZED** RECLINING CHAIR
ITEM **#75 RAF MANUAL** RECLINING CHAIR
INSIDE WIDTH: 26″

MADE IN THE USA

EXAMPLE COMBINATIONS Example diagrams are not to scale.

092026N

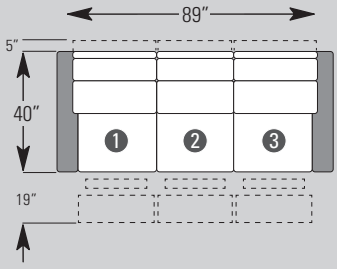

3-CUSHION RECLINING SOFA:
1) M105-66 LAF MOTORIZED RECLINING CHAIR
2) M105-69 MOTORIZED ARMLESS RECLINING CHAIR
3) M105-67 RAF MOTORIZED RECLINING CHAIR

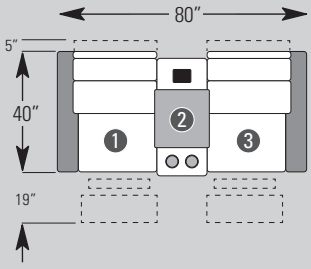

RECLINING LOVESEAT WITH CONSOLE:
1) M105-66 LAF MOTORIZED RECLINING CHAIR
2) M105-71 CONSOLE WITH OPTIONAL **WC-101** WOOD CONSOLE TRAY
3) M105-67 RAF MOTORIZED RECLINING CHAIR

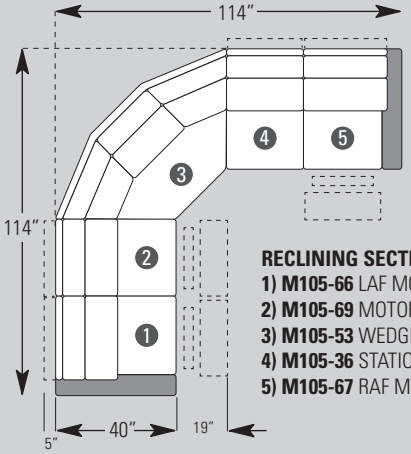

*The Wedge (-53) must be attached to a Stationary Chair (-36) on at least one end so that recliner footrests can all open at the same time without interference.

RECLINING SECTIONAL WITH WEDGE:
1) M105-66 LAF MOTORIZED RECLINING CHAIR
2) M105-69 MOTORIZED ARMLESS RECLINING CHAIR
3) M105-53 WEDGE*
4) M105-36 STATIONARY ARMLESS CHAIR
5) M105-67 RAF MOTORIZED RECLINING CHAIR

M105 RECLINING SECTIONAL WITH HEADREST

Choose from a variety of different pieces to create an infinite number of combinations. Each piece is a single seat, and our innovative bracket system allows you to position them in any configuration; from a simple reclining sofa to a custom-sized sectional. This bracket system keeps the units together and prevents shifting or separating. Note that armless sides have exposed connector brackets, so all configurations must have an arm at both the left and right ends.

All dimensions are approximate and subject to change without notice.
See www.smithbrothersfurniture.com for more information.

S|B SMITH BROTHERS

COMMON DIMENSIONS

These dimensions are the same for all pieces in this group unless otherwise noted.

OVERALL HEIGHT	43″
SEAT HEIGHT	22″
SEAT DEPTH	19″
ARM HEIGHT	25″
RECLINER FOOTREST EXTENSION	19″
MOTORIZED SWIVEL/SWIVEL GLIDER RECLINERS (-78, 92)	17″
WALL CLEARANCE NEEDED	5″
MOTORIZED SWIVEL/SWIVEL GLIDER RECLINERS (-78, 92)	13″
MANUAL SWIVEL/SWIVEL GLIDER RECLINERS (-59, 91)	14″
OVERALL LENGTH FULLY RECLINED	70″
MOTORIZED SWIVEL/SWIVEL GLIDER RECLINERS (-78, 92)	66″
MANUAL SWIVEL/SWIVEL GLIDER RECLINERS (-59, 91)	69″